SHRACHI®
Agrimech
Khushali Hamesha

OWNERS MANUAL FOR

SHRACHI PETROL POWER WEEDER

CAUTION

Before using our power weeder, please read this manual carefully, to understand the proper use of your unit.

Keep this manual handy.

SAFETY FIRST

The first time user shall have practical instructions in the use of the power weeder and the protective equipment from an experienced operator.

Instructions contained in warnings within this manual marked with symbol concern critical points which must be taken into consideration to prevent possible bodily injury, and for this reason you are requested to read all such instructions carefully and follow them without fail.

ABOUT US

For more than two decades BTL (Agro) has been catering to the requirements of small and marginal farmers in India, thereby contributing towards increased farm productivity and rapid mechanization in the agrarian sector. The company is known to be the pioneer in introducing cost-effective power Weeders in India in the early 90s and with a constant focus on improving the quality and service of its product range, the company has grown to become the leading farm machinery companies in its segment.

Since inception, the company had the vision to provide a total solution to its target customers and thereby it has gradually expanded its range to include power weeders, reapers, garden tools and tractor implements. The company has also successfully diversified into manufacturing of Aerobic Biotoilets whereby it aims to provide environmental friendly total sanitation solution in the country and thereby contribute to the success of Swachh Bharat Mission (SBM).

INTRODUCTION

Congratulations on your selection of a Shrachi Power weeder. We are certain you will be pleased with your purchase of one of the finest power weeder on the market.

We want to help you get the best results from your new power weeder and to operate it safely.

This manual contains the information on how to do that; please read it carefully.

As you read this manual, you will find information that is intended to help you avoid damage to your power weeder, other property, or the environment.

We suggest you read the warranty policy to fully understand its coverage and your responsibilities of ownership. The warranty policy is included with this booklet.

When your power weeder needs scheduled maintenance, keep in mind that your Shrachi servicing dealer is specially trained in servicing Shrachi power weeder. Your Shrachi servicing dealer is dedicated to your satisfaction, and will be pleased to answer your questions and concerns.

Best wishes,
BTL EPC LTD (Agro)
SHRACHI Group Company

CONTENT

PART IDENTIFICATION

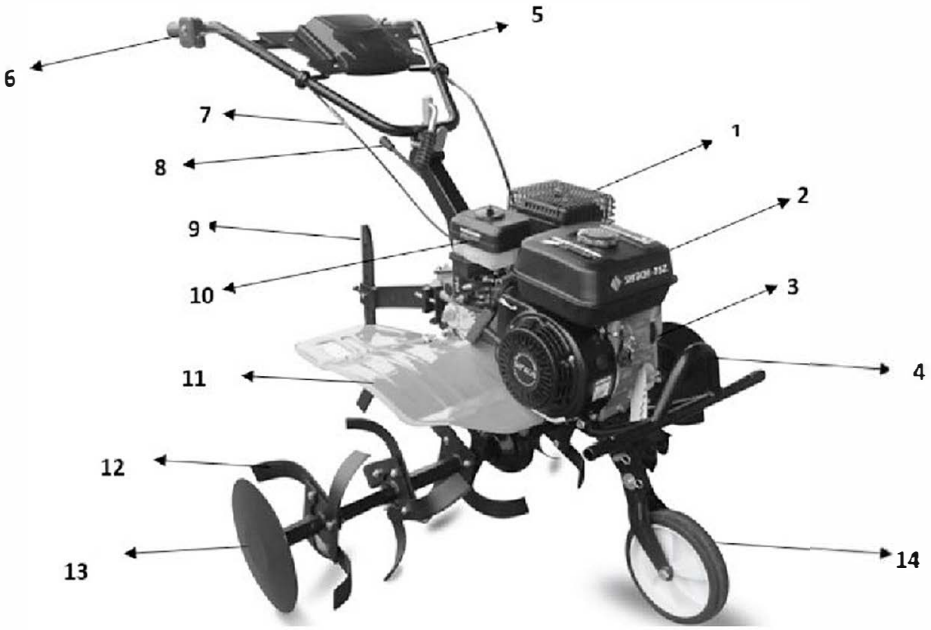

SHRACHI 7P3B POWER WEEDER

1. Muffler
2. Fuel Tank
3. Engine
4. Bumper
5. Armrest
6. Throttle Control
7. Throttle Cable
8. Shift Lever
9. Drag Bar
10. Air Cleaner
11. Fender
12. Blade
13. Cultivating Disc
14. Front Wheel

PART IDENTIFICATION

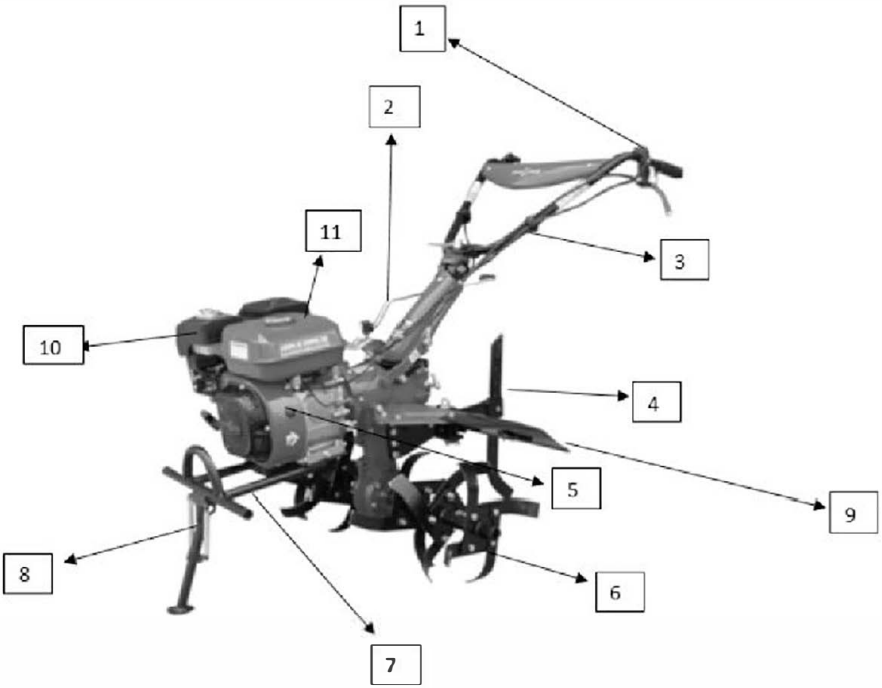

SHRACHI 7P3/7P3H/9P3 POWER WEEDER

1. Engine On-Off Switch
2. Gear Shifter
3. Handle Assembly
4. Drag Bar
5. Engine
6. Rotary Shaft
7. Front Bumper
8. Front Stand
9. Fender
10. Air Filter
11. Fuel Tank

Technical Specifications

MODEL	SHRACHI 7P3 B POWER WEEDER
Engine Type	Single Cylinder, 4 Stroke, Petrol Air Cooled Engine
Engine Power	7 HP
Engine Capacity	212 cc
No. of Gear Speed	2 Forward & 1 Reverse
Mode of Transmission	Through Belt & Chain
No. of Blades	3/4 (24 Pcs)
Weight	57 kg
Acre/hr.	0.26 – 0.30
Fuel Consumption (litre/hr)	0.8 - 1
Avg. Depth of Cut (inch)	3 - 5
Avg. Width of Cut (feet)	Up to 2.5 (Adjustable)

MODEL	SHRACHI 7P3 POWER WEEDER
Engine Power	7HP
Engine Type	Single Cylinder, 4-stroke Petrol, Air-cooled Engine
Engine Capacity	212CC
No. of Gear Speed	2 Forward & 1 Reverse
Mode of Transmission	Through PTO Shaft
No. of Blades	24
Weight	75 kg
Acre/hr.	0.26 - 0.30
Fuel Consumption (litre/hr)	0.9
Avg. Depth of Cut (inch)	3 - 5
Avg. Width of Cut (feet)	Upto 3.3

Technical Specifications

MODEL	SHRACHI 7P3 H POWER WEEDER
Engine Model	HONDA GX200 / OEM Engine for Shrachi 100
Engine Type	Single Cylinder, 4-stroke Petrol, Air-cooled Engine
Engine Power	7HP
No. of Gear Speed	2 Forward & 1 Reverse
Mode of Transmission	Through PTO Shaft
No. of Blades	24
Weight	75 kg
Acre/hr.	0.28 - 0.30
Fuel Consumption (litre/hr)	0.8 - 1
Avg. Depth of Cut (inch)	3 - 5
Avg. Width of Cut (feet)	Upto 3.3

Model	SHRACHI 9P3 POWER WEEDER
Engine Model	177 F/P, 270CC
Engine type	Single Cylinder , Vertical, 4-Stroke, Air Cooled, Petrol Engine
Engine Power	9 HP
No. of Gear Speed	2 Forward & 1 Reverse
Mode of Transmission	Gear Transmission (PTO Drive)
No. of Blades	18/24/32 Adjustable
Weight	105 kg
Acre/Hr	0.2-0.3
Fuel Consumption	0.75 (Litre/ Hr)
Working Depth	5"- 7"
Working Width	Upto 3.5 Feet

ASSEMBLY INSTRUCTIONS (7P3B)

I. RUBBER WHEEL ASSEMBLY

- Assemble wheel support to wheel base with bolts and nuts and inflate tyre with 1.5 bar air pressure, notice valve must be directed outwards.

- Align the hole of wheel axles B with the hole of output shaft A and fix them by cotter pin a and cotter pin b.

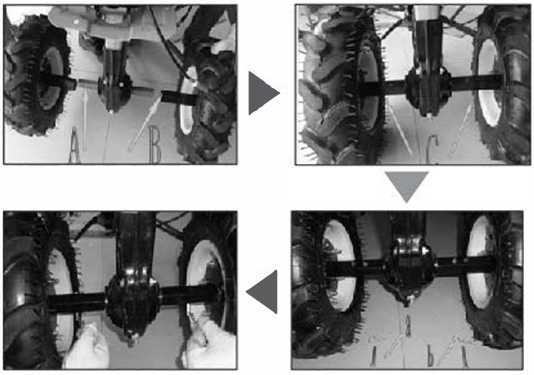

II. FRONT WHEEL ASSEMBLY

- Using bolt and nut, front wheel

- Assemble the front wheel onto the cultivator by bolt and nut.

III. DRAG BAR ASSEMBLY

- With the help of speed controlling (a), rod connector (b), cotter pin (c), shaft pin (d) and assemble them together as shown in fig.

- Take out the big pin and cotter pin. Install the coupling assembly which has been assembled together in figure (1) onto the machine as shown in the figure.

Figure (1)

Figure (2)

IV. HANDLE ASSEMBLY

- Place the tooth disc plate (2) on the handle frame.
- Now fix the handle with the help of up down handle.

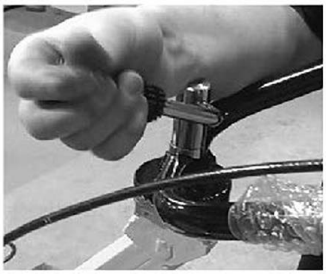

V. THROTTLE ASSEMBLY

- Attach the throttle to the right handle with the screw and nut.

ASSEMBLY INSTRUCTIONS (7P3/7P3H/9P3)

I. WHEELS

Wheels are installed on both side of the drive shaft of weeder running gear.

- Insert the wheels in the hexagonal shaft aligning the holes.
- Fix the wheels in place with bolts and pin.

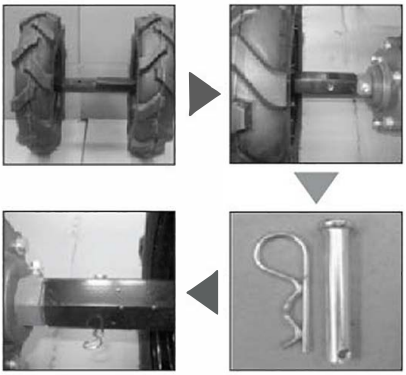

II. HANDRAIL AND HANDRAIL STAND

- Place the stop block (1) in the handle frame
- Place the tooth disc plate (2) on the handle frame.
- Now fix the handle with the help of up down handle.

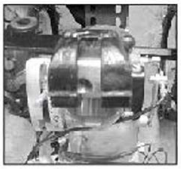

III. DUST COVER OR SAFETY COVER

- Install the back frame (1) of the dust cover with the help of bolts.
- Place the front left (2) and front right frame (3) at there respective position and tighten with bolts.
- Place the dust cover (4) on the front and back frame and tighten with bolts.
  Tines, also extend your dust cover on both sides.
- In case you extend your rotavator to 40
  Tines, also extend your dust cover on both sides.

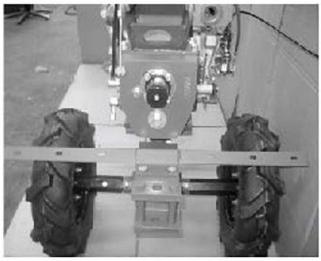

IV. HANDLE ASSEMBLY

- Install the drag bar (1), also called resistance rod in the connecting frame (2).
- Install the connecting frame along with the drag bar in the dragging assembly (3) with the pin (4).

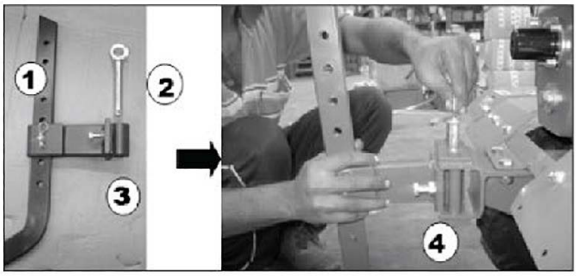

V. FRONT WHEEL

- With the help of flat washer and pin 10*50 fix the front wheel at top end of the bumper.(1)
- Then insert the bolt in the bottom slot of frame and fix the wheel.(2)

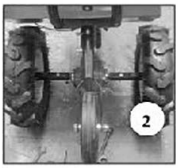

VI. BUMPER

- With the help of bolt and pin fix the bumper horizontally to the engine mounting.(1)

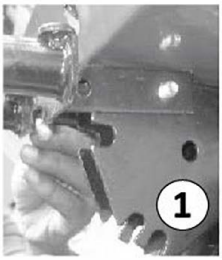

OPERATIONS OF 7P3B

FIRST - START INSPECTION

IMPORTANT! The engine can be seriously damaged without oil. Always check the oil level before using. The machine must stand on level ground when checking.

- Make sure all safety guards are in place and all nuts and bolts are secure.
- Check oil level in engine crankcase.
- Inspect air filter for cleanliness.
- Check the fuel supply. Do not fill petrol tank completely, allow space for fuel to expand.
- Be sure spark plug wire is attached and spark plug is tightened securely.
- Check depth regulator lever position.
- Examine underneath and around engine for signs of oil or fuel leaks.
- Inspect fuel hoses for tightness and fuel.
- Look for signs of engine damage.
- Remove excessive debris from silencer area and recoil starter.

STARTING THE ENGINE

- Move the fuel valve lever to the "ON" position
- Make sure the clutch lever is disengaged.
- When starting cool engine, turn throttle choke lever to " |⚑| " position.
- When starting warm engine and operating, turn throttle chock lever to " |⚑| " position.
- Standing behind the unit, pull the starter rope lightly until you feel resistance then pull briskly.
- Return the starter rope gently.
- When you finish cultivating, put the fuel lever back in the 'OFF' position.

TILLING

- Front wheel up: remove the lock pin and put the lock pin into the 2nd lock position.
- Start the engine as above. Let the engine run a few minutes to warm before use.
- Squeeze the clutch handle (1) and keep it in grasp, the blades or wheels will rotating and the machine will move forward.
- Release the clutch handle to stop the blades or wheels.
- Shift lever from right to left is respectively low gear, high gear, neutral gear and reverse gear.
- When shifting gears, first release the clutch lever to stop moving the machine. Then moving the shift lever to the left or right until you reach the target shift gear. Finally press down the clutch lever and the machine moves again in the corresponding shift.
- The handle can be set in almost all possible directions and makes the machine more comfortable to work with.

WARNING

If the soil fastened on the hoe blade, do not try to remove it before:

- Release the clutch lever.
- Stop the engine.
- Disconnect the spark plug cable.
- Wait up to 30 minutes after use to allow the engine to cool.
- Do not put your hand inside the hoe blade.

AFTER USE

- Check for loose or damaged parts. If required, change damaged parts.
- Tighten loose screws and nuts.
- Clean both hoe blades.
- Put the fuel valve lever to the "OFF" position.
- Disconnecting the spark plug cable.

OPERATIONS OF 7P3, 7P3H & 9P3

DAILY INSPECTION METHOD

- Check the engine oil.
- Warning! The volume of the engine oil varies according to different type engines. The volume of GX 200 is 0.6 L while the volume of 170F is 1L. Starting engine when the oil level is below the normal lever will cause serious damage.
- Put the engine in a horizontal position.
- Screw out the oil dipstick and wipe it clean.
- Put the oil dipstick into the oil hole (don't need to screw dipstick into the thread of the oil hole)
- Check the oil in the gear box.
- Put the weeder in a horizontal position and screw out the dipstick.
- The normal volume of the oil is 1L. Normal oil lever is at the edge of the end of the oil hole. If the oil lever is too low, add oil until it reach the normal oil lever.
- Check air cleaner

Warning! Do not start the engine without the air cleaner or the engine will be worn out quickly

START THE ENGINE

	Warning! When starting the engine, the shift lever must be in the neutral position and loosen the clutch handle
	1. Move the fuel valve lever to "ON" position. 2. Move the choke lever to "CLOSE" position.
	1. Turn the throttle lever left a little

	4. Press the "ON" button on the engine switch
	5. Pull the rope of the starter lightly at first until feel the resistance and then pull it out strong and quickly.
	6. Attention! Do not loosen your hand suddenly or it will rebound and hit the engine. You should pull the rope back slowly along with resilience force of it.
	7. After the engine is warmed, move the choke lever gradually to "OPEN" position.
	8. Adjust the engine speed through throttle lever.

STOP ENGINE

	Under urgent situation, press the "OFF" button on the engine switch. Under normal situation, stop the engine according to the following steps
	1. Turn the throttle lever to rightmost side
	2. Press the button "OFF" on the engine switch
	3. Turn the fuel valve lever to "OFF" Position.

I. SLOW GEAR

1. Hold the clutch bar with left hand to open the clutch.
2. Pull back the shift lever with right hand, meanwhile, pay attention if it is in the slow position, then hold the right bar with right hand (attention: do not hold the backshift bar).
3. Slowly unlock the clutch bar to close the clutch. In this situation, agriculture weeder can run at slow gear.
4. Speed up properly with right hand, then agriculture weeder can run at a slow speed of 5 km/hr.

II. FAST GEAR

1. Hold the clutch bar with left hand to open the clutch.
2. Push the shift lever to the front with right hand, meanwhile pay attention if it is in the fast position, then hold the bar with right hand (attention: do not hold the backshift bar).
3. Slowly unlock the clutch bar to close the clutch. In this situation, agriculture weeder can run at fast gear.
4. Speed up properly with right hand, then agriculture weeder can run at a speed of 10 km/hr

III. BACK GEAR

1. Hold the clutch bar with left hand to open the clutch.
2. Adjust the shift lever to the neutral position with right hand.
3. Slowly unlock the clutch bar to close the clutch, then agriculture weeder will step back.
4. If it is necessary to step back, you should hold fast clutch bar slowly with left hand, then unlock the shift bar with right hand.

IV. When shifting in the process of running, you should decelerate then close the clutch. You should change the shift until the machine stop working.

V. When changing the direction, you should rotate the bar to left or right.

VI. STOP WORKING

1. Hold the clutch bar with left hand to open the clutch.
2. After adjusting the shift lever to the neutral position, you should unlock the clutch bar to make the machine stop working.

SUITABLE ACCESSORIES

7P3B Power Weeder	7P3/7P3H/9P3 Power Weeder
	
Trimming Disc (Use to Protect Blades from the Boundary of fields, cuts side grass, Restrict Bushes/ Branches to get inside Rotary)	**Trimming Disc** (Use to Protect Blades from the Boundary of fields, cuts side grass, Restrict Bushes/ Branches to get inside Rotary)
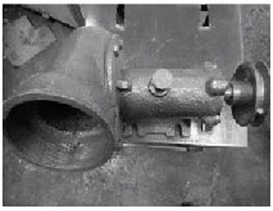	
Water Pump (Made of Casting, Used for lifting of Water from low level)	**Water Pump** (Made of Aluminium, Used for lifting of Water from low level)
	
Anti Wind Blade Assembly (Used for Tilling of soil, Restrict the Tilling Depth, Can Work in Both Dry & Wetland	**Anti Wind Blade Assembly** (Used for Tilling of soil, Restrict the Tilling Depth, Can Work in Both Dry & Wetland

7P3B Power Weeder	7P3/7P3H/9P3 Power Weeder
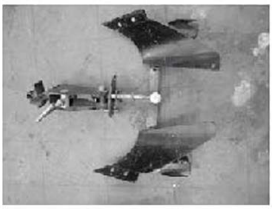	
Turnable Ditcher (It can be Revolved for Ploughing of Soil as per direction required)	**Turnable Ditcher** (It can be Revolved for Ploughing of Soil as per direction required)
	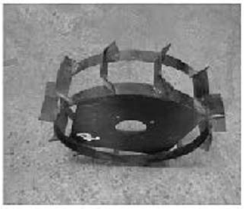
Euro Type Cage Wheel (Can be used as an alternative of Rubber Tyre in field, while attaching Plough, Ditcher etc)	**Euro Type Cage Wheel** (Can be used as an alternative of Rubber Tyre in field, while attaching Plough, Ditcher etc)
	
HTP Sprayer (Can be used for Spraying Operation in field for Spraying Water or Pesticide mix)	**High Pressure Sprayer** (Diaphragm Type Sprayer used for Spraying of Water or Pesticide mix in field)

7P3B Power Weeder	7P3/7P3H/9P3 Power Weeder
	
Ditching Blade (Can be used for Making Canals, and throwing the soil at both sides)	**Ditching Blade** (Can be used for Making Canals, and throwing the soil at both sides)
	
Plough (Used for Turning of Soil, used specially in hard soil)	**Plough** (Used for Turning of Soil, used specially in hard soil)
	
Wheel Axle (This part is attached with Rubber Tyre, can be fixed with Cage Wheel as well)	**Wheel Axle** (This part is attached with Rubber Tyre, can be fixed with Cage Wheel as well)
	
Spike Tilling Blade Set (This part contains 2 nos. of Rotary Shafts & 14 nos. of Spike Blades, used for Tilling specially in Hard Soil with stones)	**Spike Tilling Blade Set** (This part contains 2 nos. of Rotary Shafts & 14 nos. of Spike Blades, used for Tilling specially in Hard Soil with stones)

ATTENTION OF OPERATING ENGINE

RUNNING-IN OF NEW ENGINE:

If your engine has not breaking in yet, improper usage will shorten the life of engine. The initial 20 hours is the break-in-period.

1. RUNNING IN FOR 5-MINS AFTER FIRST START. Running with low speed and low load before the engine gets hot. Avoid running with high speed and full load or low speed and no load.
2. AVOID RUNNING WITH OVERLOAD. During break-in-period, the engine can't run with full load, but can run with 3600 rpm and 50% load.
3. CHANGE ENGINE OIL REGULARLY. After working for 20 hrs, change the oil when engine is still warm, otherwise it will be difficult to drain the residual oil in the engine.

DOs

- ✔ Do visual check before starting every time.
- ✔ Keep agriculture weeder clean.
- ✔ Do use recommended fuel and lubricants only.
- ✔ Do check fuel level.
- ✔ Do check air intake filter oil level.
- ✔ Do check engine oil and gear oil levels.
- ✔ Do check for any leakage.
- ✔ Do check decompression knob before starting.
- ✔ Do check gear in neutral position before starting.
- ✔ Do use recommended attachments only.
- ✔ Do maintain distance of 1ft from buildings and other equipments when operating, to avoid any accidents.
- ✔ Only operator with knowledge of machine and its operation must be permitted to operate agriculture weeder.
- ✔ Let agriculture weeder cool down before storing indoors.

DON'Ts

- ✗ Don't overflow the fuel, but also never let fuel tank run out empty.
- ✗ Don't use adulterated fuel.
- ✗ Don't smoke or allow flame or spark where agriculture weeder is refueled or where fuel is stored.
- ✗ Don't inhale exhaust for it can contain poisonous carbon monoxide.
- ✗ Don't run agriculture weeder without adequate ventilation.
- ✗ Don't lean/tilt weeder more than 20°, otherwise fuel may spill.
- ✗ Don't cover agriculture weeder top so as to avoid fire.
- ✗ Don't touch muffler/exhaust, as it gets hot when operating and stays hot for sometime after stopping.
- ✗ Don't delay on service schedules.
- ✗ Don't operate weeder continuously more than 2hrs.30mins for any given operation
- ✗ Give break of 20mins.
- ✗ Don't take any alterations in design, operations and functioning of agriculture weeder other than company's recommendation.

MAINTENANCE

Your Shrachi power weeder is designed to provide many hours of trouble free service. Regular scheduled maintenance will help your power weeder achieve that goal. If you are unsure or are not equipped with the necessary tools, you may want to take your unit to a Shrachi Service Dealer for servicing. To help you decide whether you want to DO-IT-YOURSELF or have the Shrachi Dealer do it, each maintenance task has been graded. If the task is not listed, see your Shrachi Dealer for servicing.

SKILL LEVEL
Level 1 = Easy to do. Most required tools come with unit.
Level 2 = Moderate difficulty. Some specialized tools may be required.
Level 3 = Experience required. Specialized tools are required. Recommended that the unit be returned to your Shrachi dealer for servicing.

Switch off the engine before maintenance and wait for the engine to cool down.
Shrachi offers maintenance kits and parts to make your maintenance job easier.

Working intervals and maintenance contents	Every day	Work with weeder under load for 8 hrs	Work for one month or 20 hrs	Work for 6 months or 100 hrs	Every year or 200 hrs	Per 2 years or 500 hrs	REQUIRED SKILL LEVEL
Check and tighten nuts and bolts	✓						1
Check and refuel lube	✓						2
Check and change lube		✓ (First time)	✓ (Second time)	✓ (Third time or more)			2
Check if there is oil leakage	✓						1
Clean mud, grass and oil stain	✓						1
Debug malfunction	✓						3
Adjust operation parts	✓						3
Friction plate of clutch						✓	3
Air cleaner (Check & Clean)	✓						
Spark Plug (Check & Clean)					✓		
Gears and bearings					✓		3

TROUBLESHOOTING

Engine will not start	Add fuel to fuel tank. Connects parking plug wire to sparking plug Throttle must be positioned at choke for a cold start
Engine runs rough	Clean or replace air cleaner
Engine is hard to start	Drain old fuel and replace with fresh. Make sures parking plug wire is securely attached to sparking plug. The fuel valve lever must be in the "ON" position.
Engine misses or lacks power	Clean or replace air cleaner Incorrect carburetor adjustment, take to authorized engine service center Replaces parking plug and adjust gap Drain and refill petrol tank and carburetor
Cultivator is difficult to control when tilling (machine jumps or lurches forward)	Lock wheels in tilling position Raise the tines for shallower tilling by lowering the depth regulator lever
Tines turn, cultivator does not move	Lower the tines for deeper tilling by raising the depth regulator lever
Excessive heat builds up in transmission/tine area during tilling	Remove vegetation by following instructions in Clean Tine Axle Shaft of Normal Care section. FOLLOW ALL SAFETY INSTRUCTIONS. Check transmission fluid and fill if needed

SERVICE INFORMATION

This is the Owner's manual for your Shrachi Agro product. It contains the, operational tips, do's and don'ts, sales intimation card and service coupons.

Operations:
This section includes the general operating procedure regarding the machine, how to operate and bring the machine in working condition.

Do's and Don'ts :
Do's and don'ts are the important point to be considered while operating the machine , which will in turn be beneficial for you and your machine and will yield much more profit than imagined.

SALES INTIMATION CARD: Before taking the delivery of your product from our dealer, you will have to sign the sales intimation card. Our dealer will give free training to you or your operator for proper operation and maintenance of your product. Before signing the sales intimation card, make sure that the training is to your satisfaction.

WARRANTY:
Our warranty will be of 1 year or 280 hrs whichever is earlier. Our warranty is subject to certain conditions. For example, the warranty will not be valid if your product is misused or is not serviced properly or if you use non-genuine spare parts or accessories. Therefore, please ask our dealer to explain to you the warranty conditions in detail.

SERVICES:
Your product should be serviced periodically. Our dealer will explain everything to you.
There will be four services in a year, first two services labour charge will be free.

IMPORTANT:
The service book is a very important document and should be kept in safe custody. If you lose this book, you will not be entitled to get free services and the warranty will cease to be valid.

Along with your Shrachi Agro product, you will also get an operator's manual. Read the manual carefully and follow the instructions in it strictly.

CONDITIONS OF SALES

1. Free service period is effective up to 140 hours or six months whichever is earlier from the date of dispatch/delivery of any machine.
2. The purchasers/his authorized representative have been acquainted with the operation and routine service of the machine and the conditions governing the warranty and free service of the machine.
3. The owner's manual should be handed over to the owner.
4. The signature of the purchaser/his authorized representative confirms proper delivery and acceptance of the machine, accessories and tools.
5. Disputes, if any, are subject to courts having jurisdiction in Kolkata.

WARRANTY POLICY

SHRACHI POWER WEEDER

SL No:

NAME OF PURCHASER	**Engine No.**
	Chassis No. / Serial No.
	Date of Delivery

SALES INTIMATION CARD	**SHRACHI POWER WEEDER**
Model	INVOICE NO. & DATE
Name	Engine No.
Vill	
P.O.	Chassis No/ Serial No
P.S.	
DIST	Delivery date
PIN	
STATE	
MOB	
The machine with all accessories and tool kit has been handed over to the purchaser ingood order and condition as per delivery instructions, training and service.	
Signature of customer	Dealer's name & stamp
Scan Copy Of the card has to be sent to company within 15 days from the date of the Delivery / Supply with Dealer Chalan	

1) This warranty is extended only to the first purchaser of the machine for the specific period of 1 Year from the date of delivery/dispatch or 280 hrs of operation whichever is earlier provided servicing and maintenance of the machine have been strictly observed as per operator's manual and subject to condition stated below:

2) The warranty will be carried out only. The sales intimation card should be properly filled up by the dealer and customer, and must be submitted to the respective branches from where the machine was dispatched within 15 days from the date of sales. Unless the sales intimation has been received, no warranty claim will be entertained.

3) Any reconditioning/repair of the machine may be carried out by our authorized representative.

4) All the free & paid service should be done in the time or hour which is earlier to avail the warranty.

5) The warranty does not cover :
   - Natural wear and tear of the Power Weeder components.
   - Defects due to abnormal application of the power Weeder components for purposes for which it is not designed.
   - Damages due to inadequate maintenance and servicing or due to the ignorance of the operators.
   - Damages resulting from overloading of the Power Weeder, be it temporary or permanent.
   - Damages resulting from neglecting symptoms betraying defects of the Power Weeder.

6) The warranty ceases if spare parts, accessories or implements are not supplied by us or obtained from other sources without authorization, is used on or with the Power Weeder.

7) Tyres, Tubes, Belts, Glass and Plastic parts accessories panel instruments, electrical instruments, Oil seals, rubber Parts, Bearings etc are NOT covered by warranty.

8) Dealers/customer (through dealer) should raise the warranty claim within the warranty period (six months from sales date) through proper documents with correct information to the respective Factory.

9) The warranty ceases immediately if the Power Weeder suffers an accident.

10) The warranty ceases of the power Weeder has been subjected to modification or designed and other changes without the Company's approval.

11) The warranty expires of the Power Weeder has been reconditioned or repaired in any other shops or by persons other than those authorized by the company.

12) Warranty shall not apply in case of any defects in materials or parts, which cannot be discovered by ordinary factory inspection.

13) The warranty shall provide for either repair or replacement according to the discretion of the company.

14) Warranty claims to be sent to the factory within a month from the date of failure with all necessary documents & failed parts.

15) If the claim does not reach within a month of replacement / repair the same will be rejected.

16) Ignorance of Warranty Policy will not be entertained.

Customer signature **Dealer's Stamp, Sign and date**

SERVICES

SHRACHI POWER WEEDER

1) **Training:** Thorough training in the operation and maintenance will be given by the dealer before delivery of the Power Weeder.
2) **Inspection:** Prior to delivery our dealer will carry out the pre-delivery service of the machine.
3) **Free & Paid Services:** Our dealer will render two free services as follows:
   i) PDI: Before delivery to the customer this checking should be done at dealer point.
   ii) 1stFree service within 70 hours of operation or 3 months from the date of delivery whichever is earlier.
   iii) 2nd Free service within the next 140 hours of operation or 6 months from the date of delivery whichever is earlier.
   iv) 1st paid service within the next 210 Hrs of operation or 9 months from the date of delivery whichever is earlier.
   v) 2nd paid service within the next 280 Hrs or 12 months from the date of delivery whichever is earlier.
4) Our authorized dealer is ready with specialist mechanics and modern facilities to give expert advice on any question regarding Shrachi power Weeder at any time, even after expiry of the warranty period.

PDI AT DEALER POINT

MECHANICS REPORT

Model :	
Chassis No. :	
Engine no. :	

SHRACHI POWER WEEDER

GENERAL CONDITION OF POWER WEEDER

(Mark in the appropriate box)

	Clean	Dirty	Normal	Below Normal
Air cleaner oil				
Engine oil				
Gear box oil				
Fuel Level & Supply				

Indications of any defect/ mishandling/ accident noted. (describe indicating name and Dr. no. of parts, specify suspected cause and action taken, if any , to rectify
1. Engine 2. Clutch 3. Gearbox 4. PTO 5. Anyother

Mechanic's Name	Signature

PDI SERVICING

MARK AFTER EACH OPERATION IS COMPLETED

1) Clean the machine thoroughly.
2) Clean crank case after running the engine for 3 minutes and change engine oil (SAE40 grade or 20w40 grade or 1Sw30 grade [in cooler places])
3) Clean lubricating oil filter.
4) Clean air cleaner and filter, change oil in case of oil bath type air cleaner.
5) Change gear case oil if necessary (EP 90 or Ep140).
6) Check whether the connection bolts are loose or not and fasten the loose bolts according to their moment
7) Oil main clutch thrust bearing and intermediate bearing, main clutch lever etc., if necessary.
8) Oil steering clutch lever joints, arm shafts and shaft from arm shaft.
9) Listen and check if there is malfunction of any parts(Such as abnormal noise, overheat, loose screw and so on)
10) Adjust clutch, accelerator, brake etc, if necessary.
11) Lubricate all moving parts.
12) Check and tighten rotavator blade nuts
13) Change the fuel filter, if necessary, otherwise clean and install again for the first servicing.
14) Adjust valve clearance when the engine is cold.
15) Check and adjust the level of dragbar assembly.
16) Check the safety pin location.
17) Check the rpm of engine & Pto shaft.
18) Check all the control systems.
19) Check the Tyre pressure properly and fill in with recommended pressure.on regarding Shrachi power Weeder at any time, even after expiry of the warranty period.

MECHANIC	PURCHASER
Sign	Sign
Name	Name
Date	Date

SL NO-		
SHRACHI POWER WEEDER		
Model		Due within before delivery of machine
Chassis No.		
Engine No.		
Date of Delivery		
Hours of Operation		
Date of Service		
Service has been done to my Satisfaction		
Name & Signature of owner		PDI
Dealer's Name & Signature		
Owner's Copy		

PDI COUPON

SL NO-	PDI at dealer point	
SHRACHI POWER WEEDER		
Model		Due within before delivery of machine
Chassis No.		
Engine No.		
Date of Delivery		
Hours of Operation		
Date of Service		
Service has been done to my Satisfaction		
Name & Signature of owner		PDI
Dealer's Name & Signature		
Company's copy to be returned immediately after PDI		

Model :	
Chassis No. :	
Engine no. :	

MECHANICS REPORT

SHRACHI POWER WEEDER

GENERAL CONDITION OF POWER WEEDER

(Mark in the appropriate box)

	Clean	Dirty	Normal	Below Normal
Air cleaner oil				
Engine oil				
Gear box oil				
Fuel Level & Supply				

Indications of any defect/ mishandling/ accident noted. (describe indicating name and Dr. no. of parts, specify suspected cause and action taken, if any , to rectify
1. Engine 2. Clutch 3. Gearbox 4. PTO 5. Anyother

Mechanic's Name	**Signature**

FIRST FREE SERVICING

MARK AFTER EACH OPERATION IS COMPLETED

1. Clean the machine thoroughly.
2. Clean crank case after running the engine for 3 minutes and change engine oil (SAE40 grade or 20w40 grade or 15w30 grade [in cooler places])
3. Clean lubricating oil filter.
4. Clean air cleaner and filter, change oil in case of oil bath type air cleaner.
5. Change gear case oil if necessary (EP 90 or EP140).
6. Check whether the connection bolts are loose or not and fasten the loose bolts according to their moment
7. Oil main clutch thrust bearing and intermediate bearing, main clutch lever etc., if necessary.
8. Oil steering clutch lever joints, arm shafts and shaft from arm shaft.
9. Listen and check if there is malfunction of any parts(Such as abnormal noise, overheat, loose screw and so on)
10. Adjust clutch, accelerator, brake etc, if necessary.
11. Lubricate all moving parts.
12. Check and tighten rotavator blade nuts
13. Change the fuel filter, if necessary, otherwise clean and install again for the first servicing.
14. Adjust valve clearance when the engine is cold.
15. Check and adjust the level of dragbar assembly.
16. Check the safety pin location.
17. Check the rpm of engine &pto shaft.
18. Check all the control systems.
19. Check the tyre pressure properly and fill in with recommended pressure.

MECHANIC	PURCHASER
Sign	Sign
Name	Name
Date	Date

SL NO-		
SHRACHI POWER WEEDER		
Model		Due within 70 Hrs or 3 months whichever is earlier
Chassis No.		
Engine No.		
Date of Delivery		
Hours of Operation		
Date of Service		
Service has been done to my Satisfaction		1st free service
Name & Signature of owner		
Dealer's Name & Signature		
Owner's Copy		

1st free service coupon (RS. 300)

SL NO-	1st free Service	
SHRACHI POWER WEEDER		
Model		Due within 70 Hrs or 3 months whichever is earlier
Chassis No.		
Engine No.		
Date of Delivery		
Hours of Operation		
Date of Service		
Service has been done to my Satisfaction		free service
Name & Signature of owner		
Dealer's Name & Signature		
Company's copy to be returned immediately after 1st free service		

Model :	
Chassis No. :	
Engine no. :	

MECHANICS REPORT

SHRACHI POWER WEEDER

GENERAL CONDITION OF POWER WEEDER

(Mark in the appropriate box)

	Clean	Dirty	Normal	Below Normal
Air cleaner oil				
Engine oil				
Gear box oil				
Fuel Level & Supply				

Indications of any defect/ mishandling/ accident noted. (describe indicating name and Dr. no. of parts, specify suspected cause and action taken, if any , to rectify
1. Engine 2. Clutch 3. Gearbox 4. PTO 5. Anyother

Mechanic's Name	**Signature**

SECOND FREE SERVICING

MARK AFTER EACH OPERATION IS COMPLETED

1) Clean the machine thoroughly.
2) Clean crank case after running the engine for 3 minutes and change engine oil (SAE40 grade or 20w40 grade or 1Sw30 grade [in cooler places])
3) Clean lubricating oil filter.
4) Clean air cleaner and filter, change oil in case of oil bath type air cleaner.
5) Change gear case oil if necessary (EP 90 or EP140).
6) Check whether the connection bolts are loose or not and fasten the loose bolts according to their moment
7) Oil main clutch thrust bearing and intermediate bearing, main clutch lever etc., if necessary.
8) Oil steering clutch lever joints, arm shafts and shaft from arm shaft.
9) Listen and check if there is malfunction of any parts(Such as abnormal noise, overheat, loose screw and so on)
10) Adjust clutch, accelerator, brake etc, if necessary.
11) Lubricate all moving parts.
12) Check and tighten rotavator blade nuts
13) Change the fuel filter, if necessary, otherwise clean and install again for the first servicing.
14) Adjust valve clearance when the engine is cold.
15) Check and adjust the level of dragbar assembly.
16) Check the safety pin location.
17) Check the rpm of engine & pto shaft.
18) Check all the control systems.
19) Check the tyre pressure properly and fill in with recommended pressure.

MECHANIC	PURCHASER
Sign	Sign
Name	Name
Date	Date

SL NO-		
SHRACHI POWER WEEDER		
Model		Due within 140 Hrs or 6 months whichever is earlier
Chassis No.		
Engine No.		
Date of Delivery		
Hours of Operation		
Date of Service		
Service has been done to my Satisfaction		
Name & Signature of owner		2nd free service
Dealer's Name & Signature		
Owner's Copy		

2nd free service coupon (Rs. 300)

SL NO-	2nd free Service	
SHRACHI POWER WEEDER		
Model		Due within 140 Hrs or 6 months whichever is earlier
Chassis No.		
Engine No.		
Date of Delivery		
Hours of Operation		
Date of Service		
Service has been done to my Satisfaction		
Name & Signature of owner		2nd free service
Dealer's Name & Signature		
Company's copy to be returned immediately after 2nd free service		

Model :	
Chassis No. :	
Engine no. :	

MECHANICS REPORT

SHRACHI POWER WEEDER

GENERAL CONDITION OF POWER WEEDER

(Mark in the appropriate box)

	Clean	Dirty	Normal	Below Normal
Air cleaner oil				
Engine oil				
Gear box oil				
Fuel Level & Supply				

Indications of any defect/ mishandling/ accident noted. (describe indicating name and Dr. no. of parts, specify suspected cause and action taken, if any , to rectify
1. Engine 2. Clutch 3. Gearbox 4. PTO 5. Anyother

Mechanic's Name	**Signature**

FIRST PAID SERVICING

MARK AFTER EACH OPERATION IS COMPLETED

1) Clean the machine thoroughly.
2) Clean crank case after running the engine for 3 minutes and change engine oil (SAE40 grade or 20w40 grade or 15w30 grade [in cooler places])
3) Clean lubricating oil filter.
4) Clean air cleaner and filter, change oil in case of oil bath type air cleaner.
5) Change gear case oil if necessary (EP 90 or EP140).
6) Check whether the connection bolts are loose or not and fasten the loose bolts according to their moment
7) Oil main clutch thrust bearing and intermediate bearing, main clutch lever etc., if necessary.
8) Oil steering clutch lever joints, arm shafts and shaft from arm shaft.
9) Listen and check if there is malfunction of any parts(Such as abnormal noise, overheat, loose screw and so on)
10) Adjust clutch, accelerator, brake etc, if necessary.
11) Lubricate all moving parts.
12) Check and tighten rotavator blade nuts
13) Change the fuel filter, if necessary, otherwise clean and install again for the first servicing.
14) Adjust valve clearance when the engine is cold.
15) Check and adjust the level of dragbar assembly.
16) Check the safety pin location.
17) Check the rpm of engine & pto shaft.
18) Check all the control systems.
19) Check the tyre pressure properly and fill in with recommended pressure.

MECHANIC	PURCHASER
Sign	Sign
Name	Name
Date	Date

SL NO-		
SHRACHI POWER TILLER		
Model		Due within 210Hrs or 9 months whichever is earlier
Chassis No.		
Engine No.		
Date of Delivery		
Hours of Operation		
Date of Service		
Service has been done to my Satisfaction		
Name & Signature of owner		1st paid service
Dealer's Name & Signature		
Owner's Copy		

1st Paid service

SL NO-	1st Paid Service	
SHRACHI POWER TILLER		
Model		Due within 210 Hrs or 9 months whichever is earlier
Chassis No.		
Engine No.		
Date of Delivery		
Hours of Operation		
Date of Service		
Service has been done to my Satisfaction		
Name & Signature of owner		1st paid service
Dealer's Name & Signature		

Model :	
Chassis No. :	
Engine no. :	

MECHANICS REPORT

SHRACHI POWER WEEDER

GENERAL CONDITION OF POWER WEEDER

(Mark in the appropriate box)

	Clean	Dirty	Normal	Below Normal
Air cleaner oil				
Engine oil				
Gear box oil				
Fuel Level & Supply				

Indications of any defect/ mishandling/ accident noted. (describe indicating name and Dr. no. of parts, specify suspected cause and action taken, if any , to rectify
1. Engine 2. Clutch 3. Gearbox 4. PTO 5. Anyother

Mechanic's Name	Signature

SECOND PAID SERVICING

MARK AFTER EACH OPERATION IS COMPLETED

1) Clean the machine thoroughly.
2) Clean crank case after running the engine for 3 minutes and change engine oil (SAE40 grade or 20w40 grade or 15w30 grade [in cooler places])
3) Clean lubricating oil filter.
4) Clean air cleaner and filter, change oil in case of oil bath type air cleaner.
5) Change gear case oil if necessary (EP 90 or EP140).
6) Check whether the connection bolts are loose or not and fasten the loose bolts according to their moment
7) Oil main clutch thrust bearing and intermediate bearing, main clutch lever etc., if necessary.
8) Oil steering clutch lever joints, arm shafts and shaft from arm shaft.
9) Listen and check if there is malfunction of any parts(Such as abnormal noise, overheat, loose screw and so on)
10) Adjust clutch, accelerator, brake etc, if necessary.
11) Lubricate all moving parts.
12) Check and tighten rotavator blade nuts
13) Change the fuel filter, if necessary, otherwise clean and install again for the first servicing.
14) Adjust valve clearance when the engine is cold.
15) Check and adjust the level of dragbar assembly.
16) Check the safety pin location.
17) Check the rpm of engine & pto shaft.
18) Check all the control systems.
19) Check the tyre pressure properly and fill in with recommended pressure.

MECHANIC	PURCHASER
Sign	Sign
Name	Name
Date	Date

SL NO-		
SHRACHI POWER TILLER		
Model		Due within 280Hrs or 12 months whichever is earlier
Chassis No.		
Engine No.		
Date of Delivery		
Hours of Operation		
Date of Service		
Service has been done to my Satisfaction		2nd Paid service
Name & Signature of owner		
Dealer's Name & Signature		
Owner's Copy		

2ndPaid service

SL NO-	2nd Paid Service	
SHRACHI POWER TILLER		
Model		Due within 280 Hrs or 12 months whichever is earlier
Chassis No.		
Engine No.		
Date of Delivery		
Hours of Operation		
Date of Service		
Service has been done to my Satisfaction		2ndPaid service
Name & Signature of owner		
Dealer's Name & Signature		